FLEETWOOD
WINDOWS & DOORS

Series 350-T
Aluminum Casement Window w/ Thermal Break Frame
"IMPACT"

L F Schmidt

L. F. SCHMIDT LICENSE No. 43409 STATE OF FLORIDA PROFESSIONAL ENGINEER

Digitally signed by Lyndon F Schmidt
Date: 2026.07.06 11:34:38 -04'00'

This item has been digitally signed and sealed by **L. F. Schmidt, P.E.** on the date adjacent to the seal.

Printed copies of this document are not considered signed and sealed and the signature must be verified on any electronic copies.

THIS PRODUCT APPROVAL IS VALID ONLY FOR THE STATE OF FLORIDA

GENERAL NOTES

1. This product has been evaluated and is in compliance with the 9th Edition (2026) Florida Building Code (FBC) structural requirements including the "High Velocity Hurricane Zone" (HVHZ).
2. Product anchors shall be as listed and spaced as shown on details. Anchor embedment to base material shall be beyond wall dressing or stucco.
3. When used in the "HVHZ" this product complies with Section 1626 of the Florida Building Code and does not require an impact resistant covering.
4. When used in areas outside of the "HVHZ" requiring wind borne debris protection this product complies with FBC Sections 1609.1.2 & R301.2.1.2 and does not require an impact resistant covering. This product meets missile level "D" and includes Wind Zone 4 as defined in ASTM E 1996 and FBC Sections 1609.1.2.2 & R301.2.1.2.1.
5. For 2x stud framing construction, anchoring of these units shall be the same as that shown for 2x buck masonry construction.
6. Site conditions that deviate from the details of this drawing require further engineering analysis by a licensed engineer or registered architect.
7. This product meets water infiltration requirements for "HVHZ".
8. Gaskets and setting blocks shall comply with Section 2411.3.4 of the FBC.
9. Aluminum components, including fasteners, shall meet the requirements of FBC Section 2003.

TABLE OF CONTENTS

SHEET#	DESCRIPTION
1	Typical elevations, design pressures and general notes
2	Elevations
3	Horizontal and vertical cross sections
4	Horizontal and vertical cross sections
5	Buck and frame anchoring
6	Buck and frame anchoring
7	Glazing details
8	Bill of materials and components

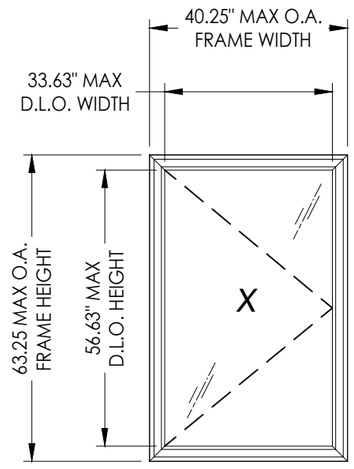

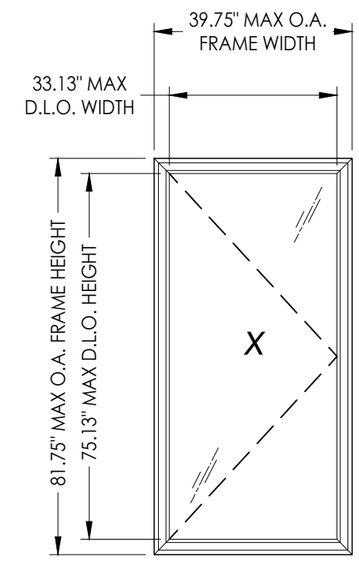

OVERALL FRAME DIMENSION	OVERALL D.L.O. DIMENSION	GLASS TYPE	DESIGN PRESSURE (PSF)	
			POSITIVE	NEGATIVE
40.25" X 63.25"	33.63" X 56.63"	G1, G2, G3, G4, G5, G6	+65.0	-65.0
39.75" X 81.75"	33.13" X 75.13"	G1, G2, G3, G4, G5, G6	+65.0	-65.0

Documents Prepared By:
Lyndon F. Schmidt
P.E. No. 43409

RW BUILDING CONSULTANTS, INC.
P.O. Box 230, Valrico, FL 33595
Phone No.: 813.659.9197
FBPE Registry No. 9813

PRODUCT: FLEETWOOD WINDOWS AND DOORS

PART OR ASSEMBLY: TYPICAL ELEVATION, DESIGN PRESSURES & GENERAL NOTES

NO.	DATE	BY	REVISIONS
7	7/02/26	LFS	UPDATE TO 9TH ED. (2026) FBC
6	7/12/23	LFS	UPDATE TO 8TH ED. (2023) FBC
5	12/7/21	LFS	SERIES NAME CHANGE
4	8/06/20	DAC	UPDATE TO 7TH ED. (2020) FBC

DATE: 10/23/13
SCALE: N.T.S.
DWG. BY: JK
CHK. BY: LFS
DRAWING NO.: FL-14904.10
SHEET 1 OF 8

© 2013 R.W. BUILDING CONSULTANTS INC.

Z:\2023 FBC Drawings\Fleetwood Windows & Doors\FL-14904 R10 Casement\FL-14904.8-10.dwg

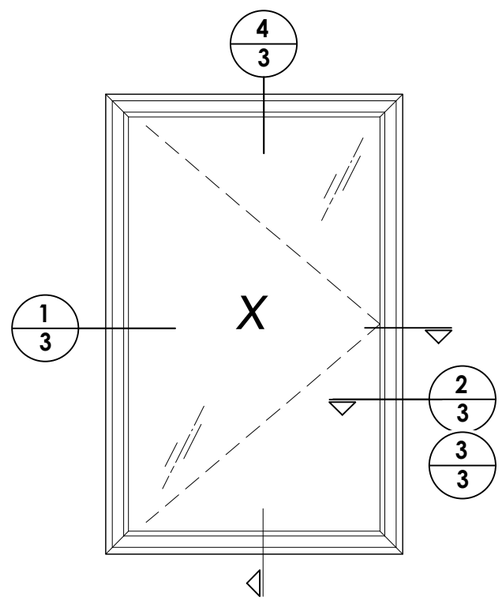

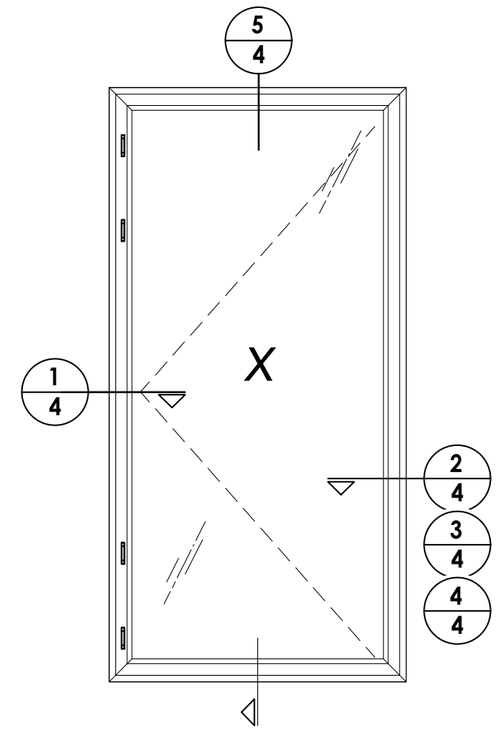

HARDWARE TABLE			
HINGE			
Qty.	**Description**	**Height**	**Snubbers**
5	Butt hinge	≤ 81.75"	Not Req'd
4	Butt hinge	≤ 81.75"	Yes (2)
2	Butt hinge	≤ 50"	Yes (2)
2	4 Bar hinge	≤ 65"	Yes (3)
HANDLES			
Points	**Description**	**Height**	
4	Multipoint	> 72"	
3	Multipoint	≤ 72"	
Qty.			
3	Cam*	≤ 65"	
1	Cam*	≤ 50"	

*Cam locks can be used in conjunction with multipoint lock or in lieu of multipoint locks

Documents Prepared By:
Lyndon F. Schmidt
P.E. No. 43409
RW BUILDING CONSULTANTS, INC.
P.O. Box 230, Valrico, FL 33595
Phone No.: 813.659.9197
FBPE Registry No. 9813

PRODUCT: FLEETWOOD WINDOWS AND DOORS

PART OR ASSEMBLY: ELEVATIONS

NO.	DATE	REVISIONS	BY
7	7/02/26	UPDATE TO 9TH ED. (2026) FBC	LFS
6	7/12/23	UPDATE TO 8TH ED. (2023) FBC	LFS
5	12/7/21	SERIES NAME CHANGE	LFS
4	8/06/20	UPDATE TO 7TH ED. (2020) FBC	DAC

DATE: 10/23/13
SCALE: N.T.S.
DWG. BY: JK
CHK. BY: LFS
DRAWING NO.: FL-14904.10
SHEET 2 OF 8

© 2013 R.W. Building Consultants Inc.

Z:\2023 FBC Drawings\Fleetwood Windows & Doors\FL-14904 R10 Casement\FL-14904.8-10.dwg

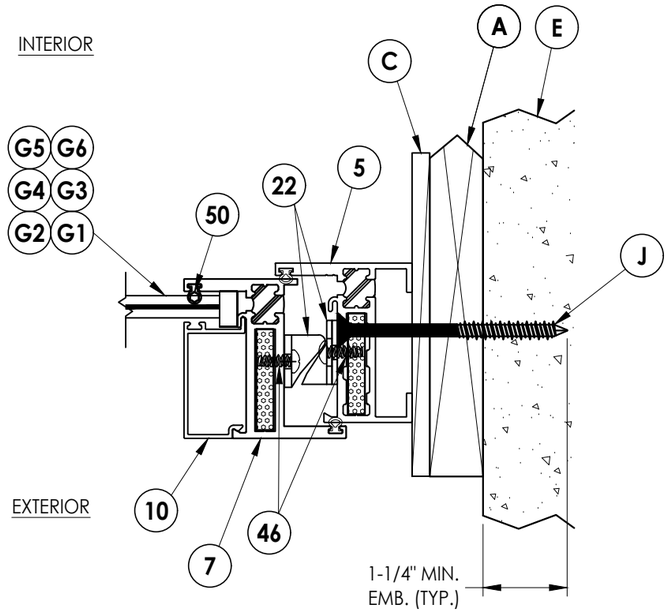

2/3 HORIZONTAL CROSS SECTION
Shown w/ 1X Sub buck option

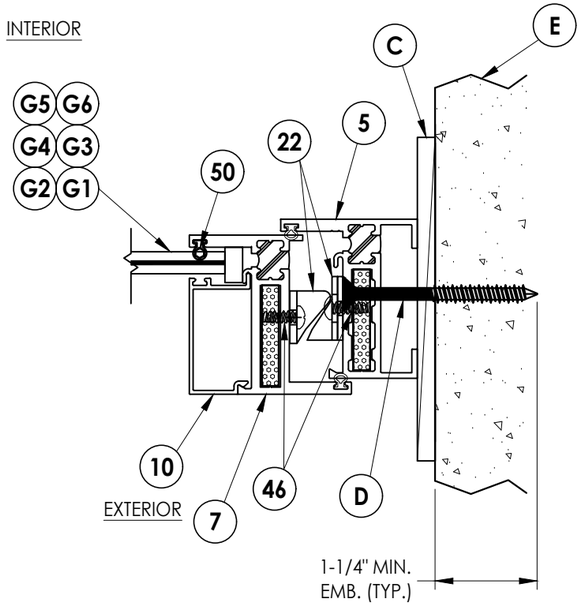

3/3 HORIZONTAL CROSS SECTION
Shown w/ Direct to Masonry option

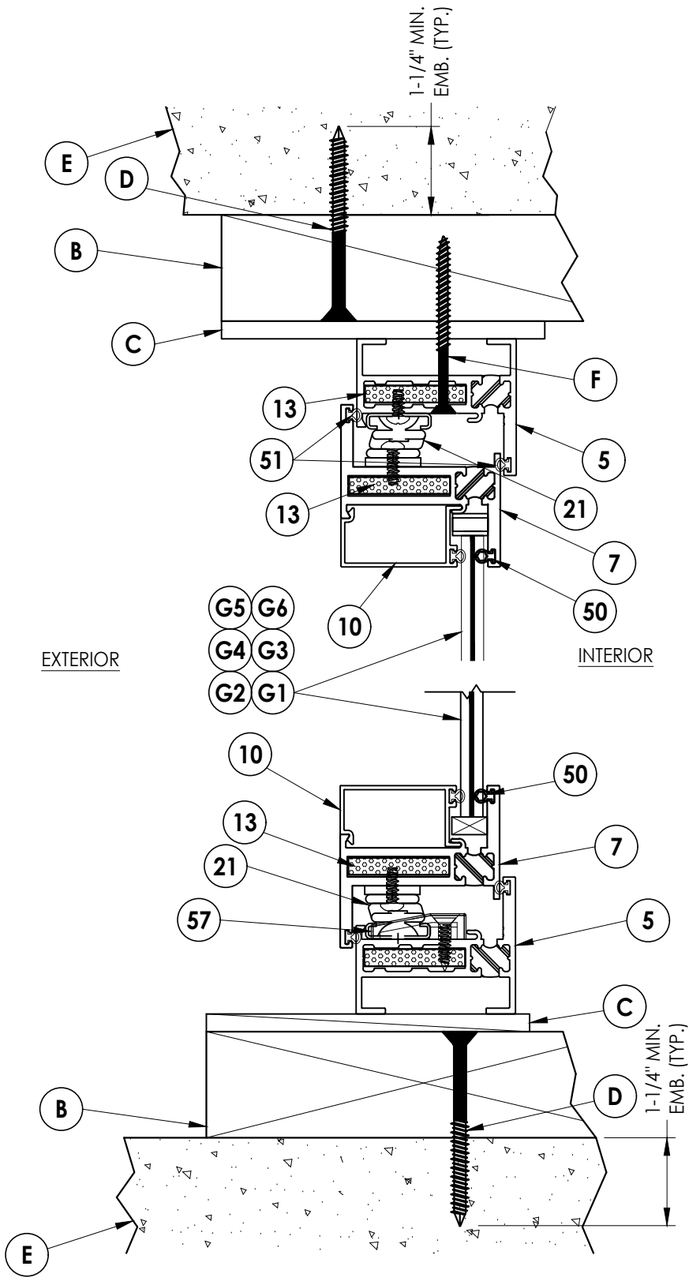

4/3 VERTICAL CROSS SECTION
Shown w/ 2X Buck Construction

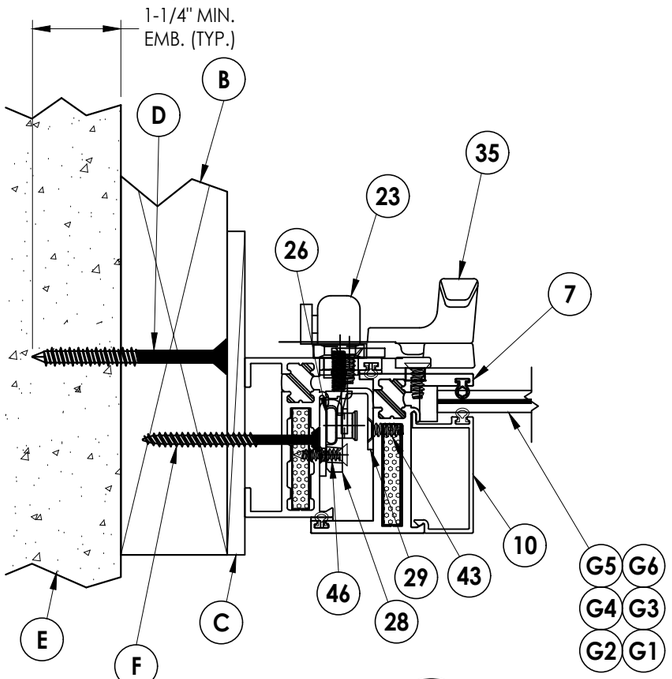

1/3 HORIZONTAL CROSS SECTION
Show w/ 2X Buck and Steel Stud options

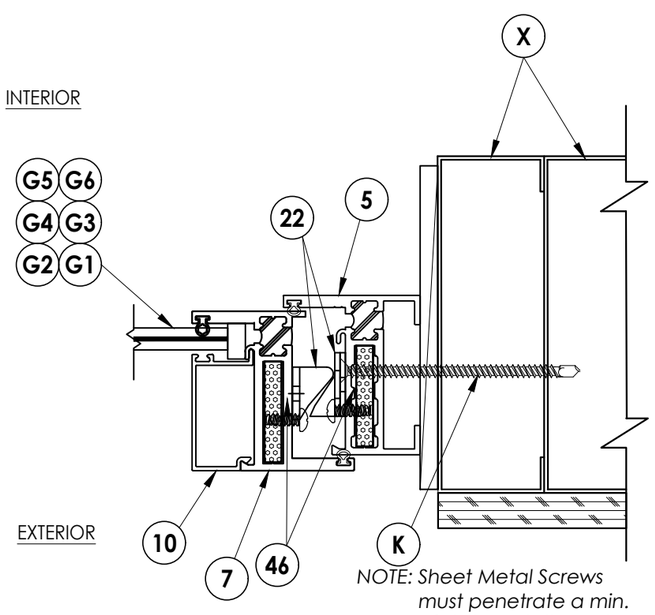

NOTE: Sheet Metal Screws must penetrate a min. of 3 threads through at least two (2) sheets of metal.

Documents Prepared By:
Lyndon F. Schmidt
P.E. No. 43409

RW BUILDING CONSULTANTS, INC.
P.O. Box 230, Valrico, FL 33595
Phone No.: 813.659.9197
FBPE Registry No. 9813

PRODUCT: FLEETWOOD WINDOWS AND DOORS

PART OR ASSEMBLY: HORIZONTAL AND VERTICAL CROSS SECTIONS

REVISIONS

NO.	DATE		BY
7	7/02/26	UPDATE TO 9TH ED. (2026) FBC	LFS
6	7/12/23	UPDATE TO 8TH ED. (2023) FBC	LFS
5	12/7/21	SERIES NAME CHANGE	LFS
4	8/06/20	UPDATE TO 7TH ED. (2020) FBC	DAC

DATE: 10/23/13
SCALE: N.T.S.
DWG. BY: JK
CHK. BY: LFS
DRAWING NO.: FL-14904.10
SHEET 3 OF 8

© 2013 R.W. Building Consultants Inc.

Z:\2023 FBC Drawings\Fleetwood Windows & Doors\FL-14904 R10 Casement\FL-14904.8-10.dwg

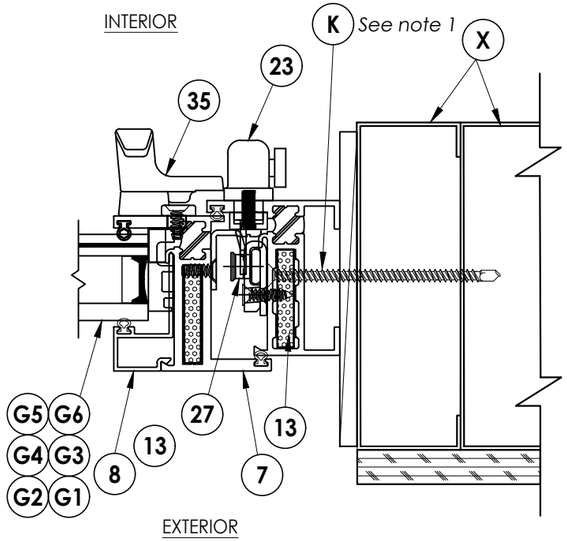

3/4 HORIZONTAL CROSS SECTION
Shown w/ Steel Stud option

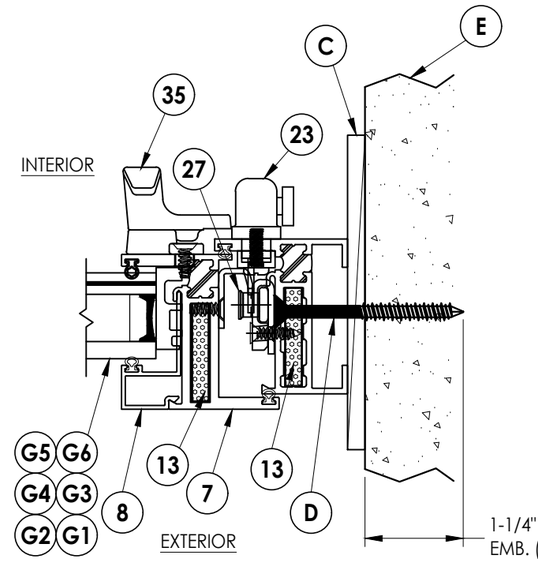

4/4 HORIZONTAL CROSS SECTION
Shown w/ Direct to Masonry option

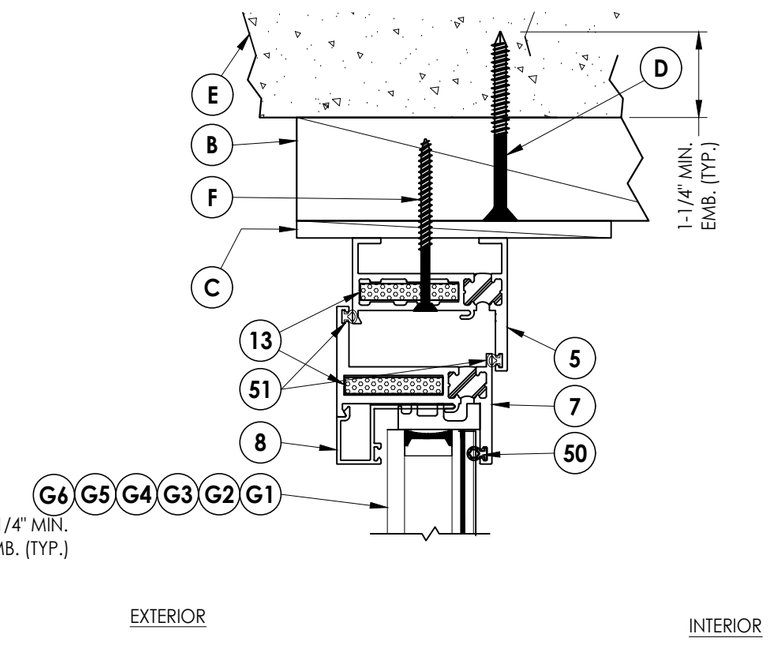

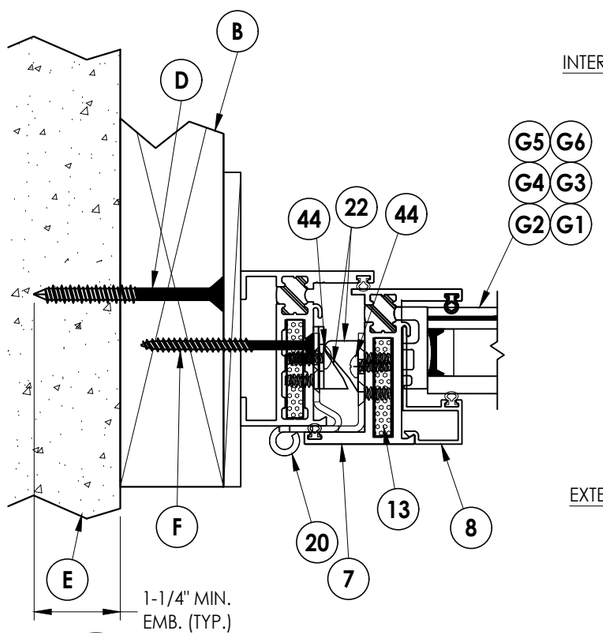

1/4 HORIZONTAL CROSS SECTION
Shown w/ 2X Buck Construction

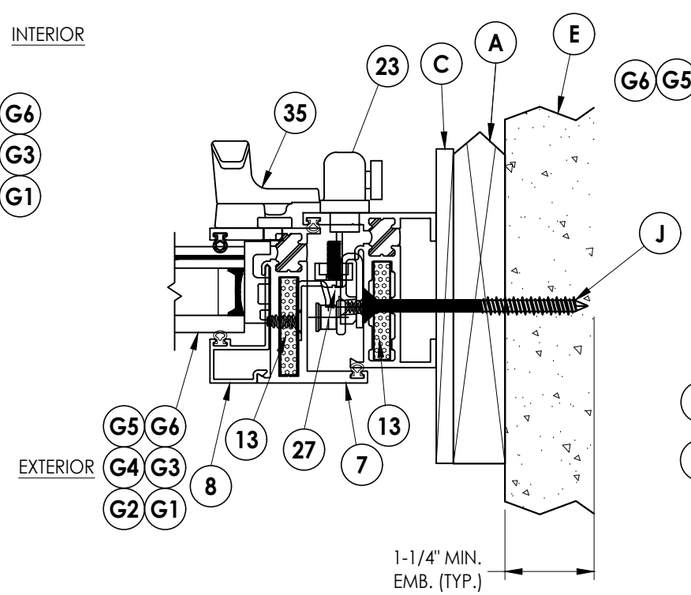

2/4 HORIZONTAL CROSS SECTION
Shown w/ 1X Sub buck option

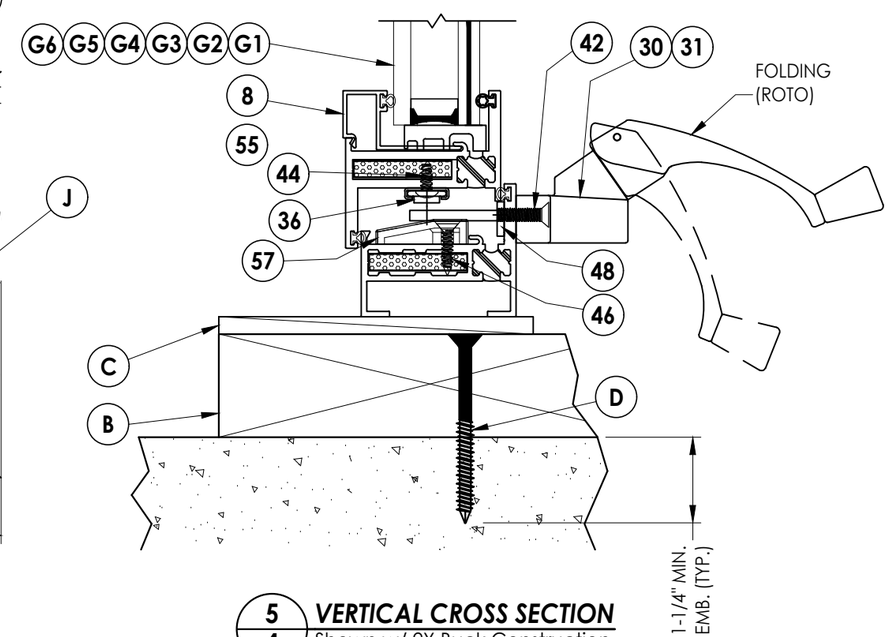

5/4 VERTICAL CROSS SECTION
Shown w/ 2X Buck Construction

NOTE:
1. Sheet Metal Screws must penetrate a min. of 3 threads through at least two (2) sheets of metal.

Documents Prepared By:
Lyndon F. Schmidt
P.E. No. 43409

RW BUILDING CONSULTANTS, INC.
P.O. Box 230, Valrico, FL 33595
Phone No.: 813.659.9197
FBPE Registry No. 9813

PRODUCT: FLEETWOOD WINDOWS AND DOORS

PART OR ASSEMBLY: HORIZONTAL AND VERTICAL CROSS SECTIONS

NO.	DATE		BY
7	7/02/26	UPDATE TO 9TH ED. (2026) FBC	LFS
6	7/12/23	UPDATE TO 8TH ED. (2023) FBC	LFS
5	12/7/21	SERIES NAME CHANGE	LFS
4	8/06/20	UPDATE TO 7TH ED. (2020) FBC	DAC

DATE: 10/23/13
SCALE: N.T.S.
DWG. BY: JK
CHK. BY: LFS
DRAWING NO.: FL-14904.10
SHEET 4 OF 8

© 2013 R.W. BUILDING CONSULTANTS INC.

Z:\2023 FBC Drawings\Fleetwood Windows & Doors\FL-14904 R10 Casement\FL-14904.8-10.dwg

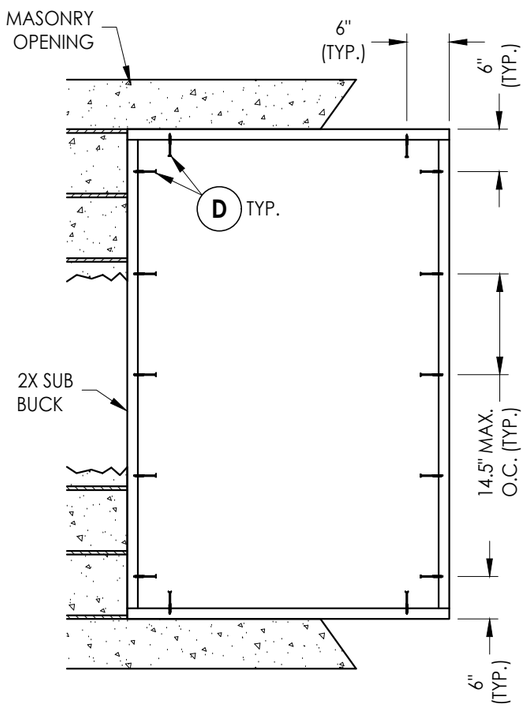

2X BUCK ANCHORING
40.25" X 63.25" Max Size

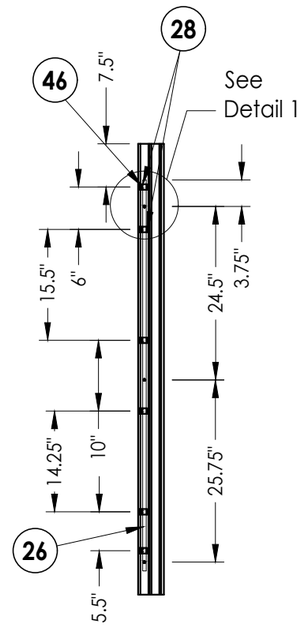

LOCK JAMB
Locking Points (3)

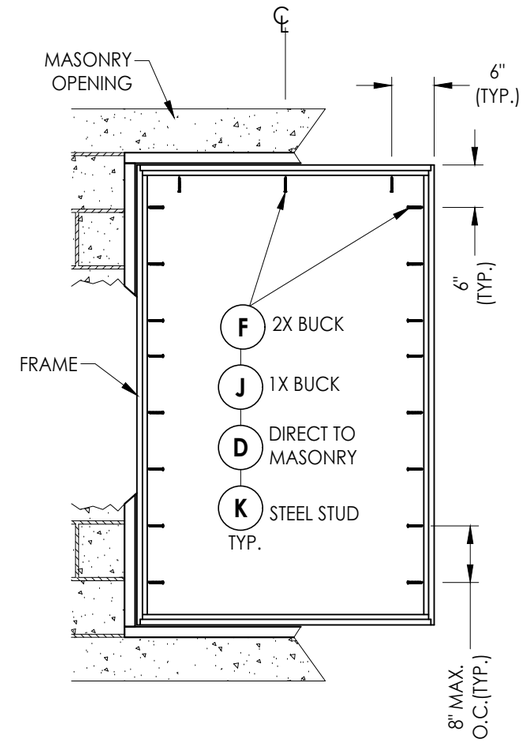

FRAME MOUNT ANCHORING
40.25" X 63.25" Max Size

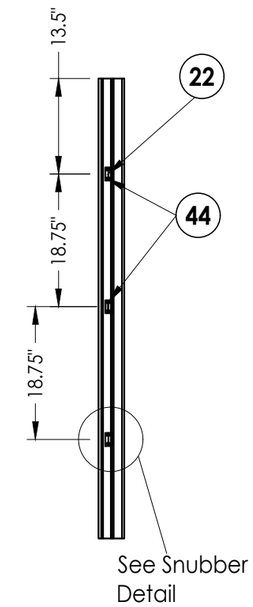

SNUBBERS JAMB

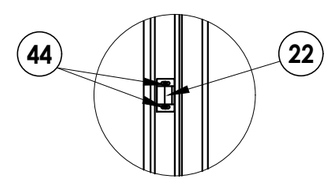

SNUBBER DETAIL

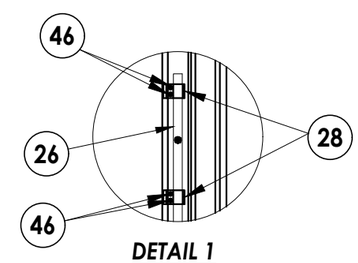

DETAIL 1

CONCRETE ANCHOR NOTES:

1. *Concrete anchor locations at the corners may be adjusted to maintain the min. edge distance to mortar joints.*
2. *Concrete anchor locations noted as "MAX. ON CENTER" must be adjusted to maintain the min. edge distance to mortar joints, additional concrete anchors may be required to ensure the "MAX. ON CENTER" dimension are not exceeded.*
3. *Concrete anchor table:*

ANCHOR TYPE	ANCHOR SIZE	MIN. EMBEDMENT	MIN. CLEARANCE TO MASONRY EDGE	MIN. CLEARANCE TO ADJACENT ANCHOR
ITW TAPCON®	1/4"	1-1/4"	2"	4"
DeWALT ULTRACON+®	1/4"	1-1/4"	1"	4"

WOOD SCREW INSTALLATION NOTES:

1. *Maintain a minimum 5/8" edge distance, 1" end distance, & 1" o.c. spacing of wood screws to prevent the splitting of wood.*

Documents Prepared By:
Lyndon F. Schmidt
P.E. No. 43409
RW BUILDING CONSULTANTS, INC.
P.O. Box 230, Valrico, FL 33595
Phone No.: 813.659.9197
FBPE Registry No. 9813

PRODUCT: *FLEETWOOD WINDOWS AND DOORS*

PART OR ASSEMBLY: *BUCK & FRAME ANCHORING*

REVISIONS

NO.	DATE		BY
7	7/02/26	UPDATE TO 9TH ED. (2026) FBC	LFS
6	7/12/23	UPDATE TO 8TH ED. (2023) FBC	LFS
5	12/7/21	SERIES NAME CHANGE	LFS
4	8/06/20	UPDATE TO 7TH ED. (2020) FBC	DAC

DATE: 10/23/13
SCALE: N.T.S.
DWG. BY: JK
CHK. BY: LFS
DRAWING NO.: FL-14904.10
SHEET 5 OF 8

© 2013 R.W. BUILDING CONSULTANTS INC.

Z:\2023 FBC Drawings\Fleetwood Windows & Doors\FL-14904 R10 Casement\FL-14904.8-10.dwg

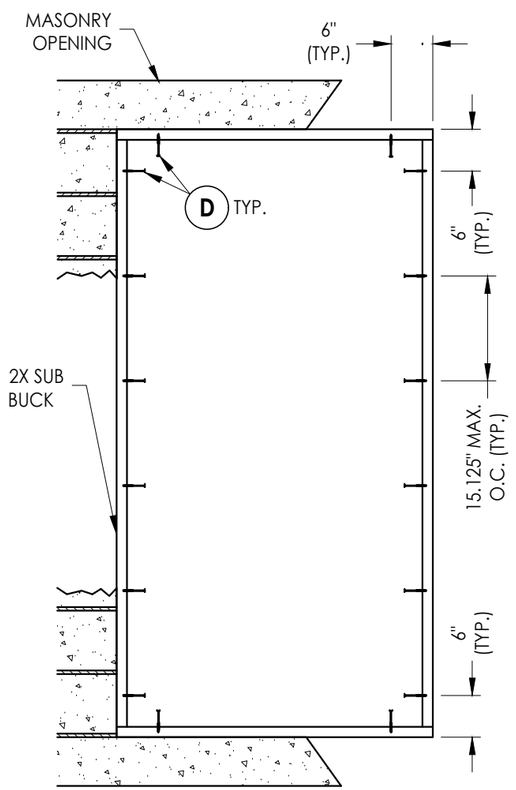

2X BUCK ANCHORING
39.75" X 81.75" Max Size

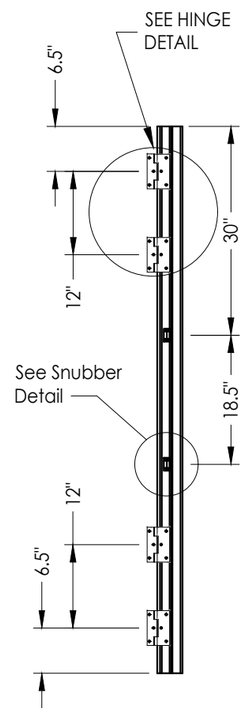

HINGE JAMB

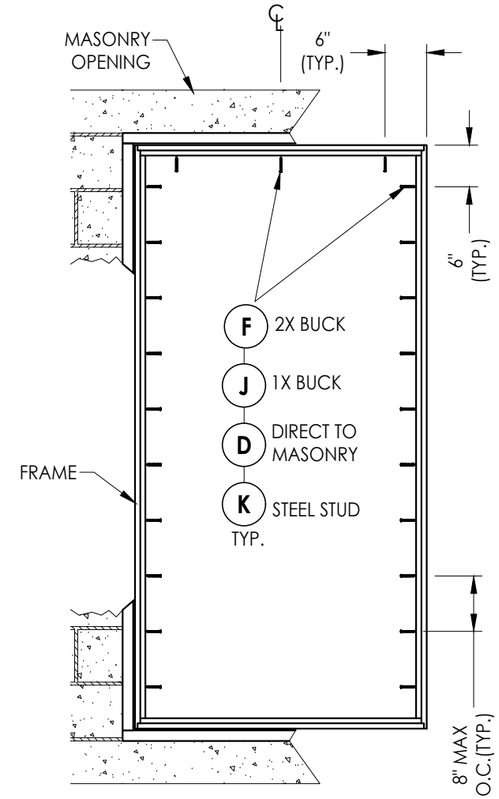

FRAME MOUNT ANCHORING
39.75" X 81.75" Max Size

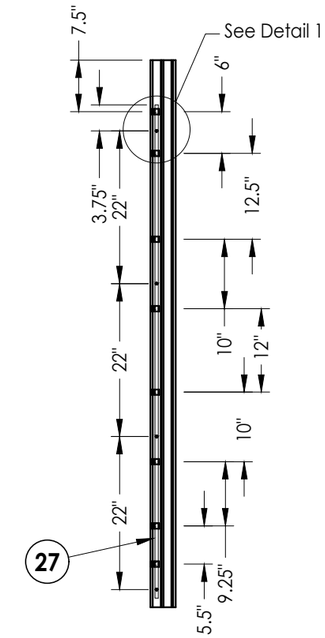

LOCK JAMB
Locking Points (4)

CONCRETE ANCHOR NOTES:

1. Concrete anchor locations at the corners may be adjusted to maintain the min. edge distance to mortar joints.
2. Concrete anchor locations noted as "MAX. ON CENTER" must be adjusted to maintain the min. edge distance to mortar joints, additional concrete anchors may be required to ensure the "MAX. ON CENTER" dimension are not exceeded.
3. Concrete anchor table:

ANCHOR TYPE	ANCHOR SIZE	MIN. EMBEDMENT	MIN. CLEARANCE TO MASONRY EDGE	MIN. CLEARANCE TO ADJACENT ANCHOR
ITW TAPCON®	1/4"	1-1/4"	2"	4"
DeWALT ULTRACON+®	1/4"	1-1/4"	1"	4"

WOOD SCREW INSTALLATION NOTES:

1. Maintain a minimum 5/8" edge distance, 1" end distance, & 1" o.c. spacing of wood screws to prevent the splitting of wood.

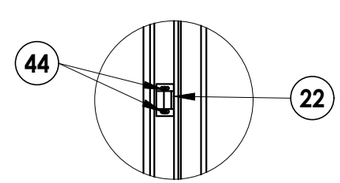

SNUBBER DETAIL

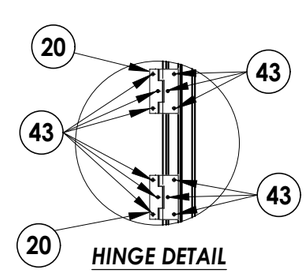

HINGE DETAIL

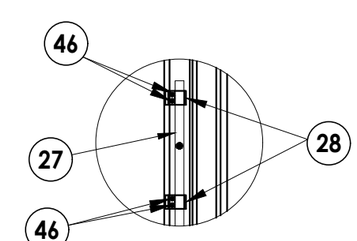

DETAIL 1

Documents Prepared By:
Lyndon F. Schmidt
P.E. No. 43409
RW BUILDING CONSULTANTS, INC.
P.O. Box 230, Valrico, FL 33595
Phone No.: 813.659.9197
FBPE Registry No. 9813

PRODUCT: FLEETWOOD WINDOWS AND DOORS

PART OR ASSEMBLY: BUCK & FRAME ANCHORING

NO.	DATE	REVISIONS	BY
7	7/02/26	UPDATE TO 9TH ED. (2026) FBC	LFS
6	7/12/23	UPDATE TO 8TH ED. (2023) FBC	LFS
5	12/7/21	SERIES NAME CHANGE	LFS
4	8/06/20	UPDATE TO 7TH ED. (2020) FBC	DAC

DATE: 10/23/13
SCALE: N.T.S.
DWG. BY: JK
CHK. BY: LFS
DRAWING NO.: FL-14904.10
SHEET 6 OF 8

© 2013 R.W. Building Consultants Inc.

Z:\2023 FBC Drawings\Fleetwood Windows & Doors\FL-14904 R10 Casement\FL-14904.8-10.dwg

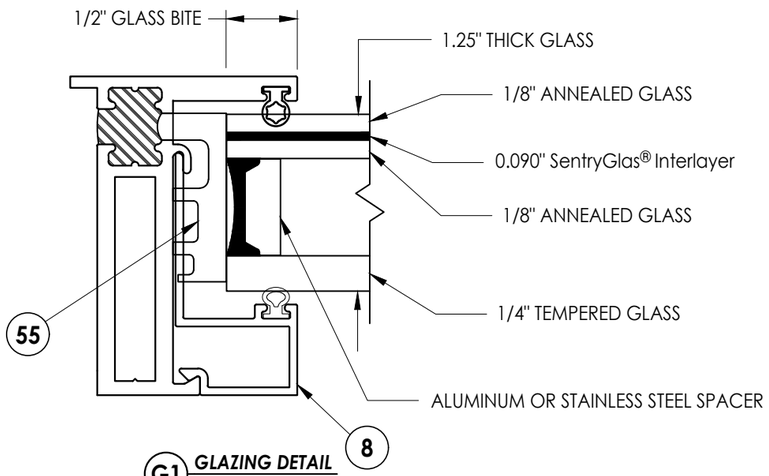

G1 GLAZING DETAIL

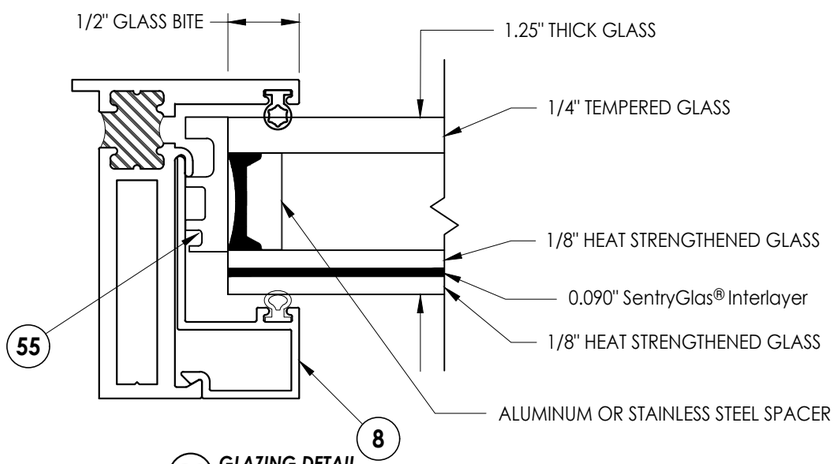

G2 GLAZING DETAIL

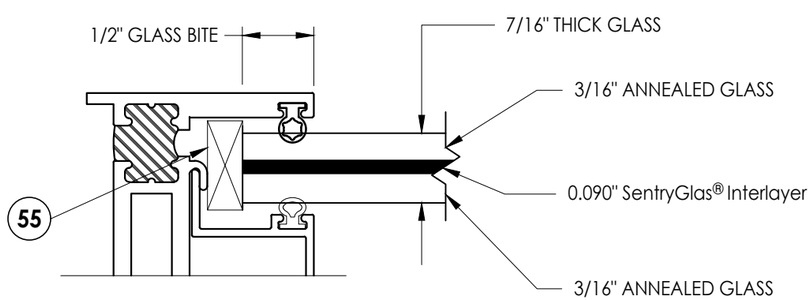

G3 GLAZING DETAIL

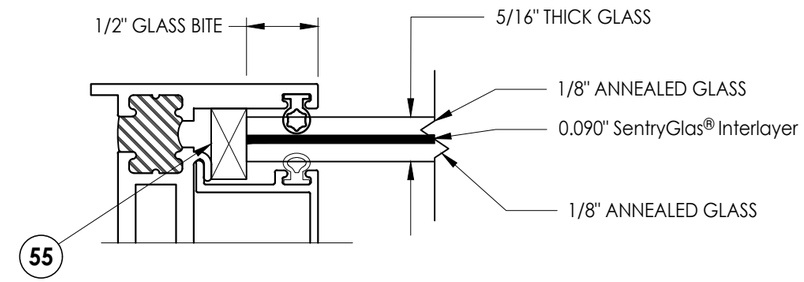

G4 GLAZING DETAIL

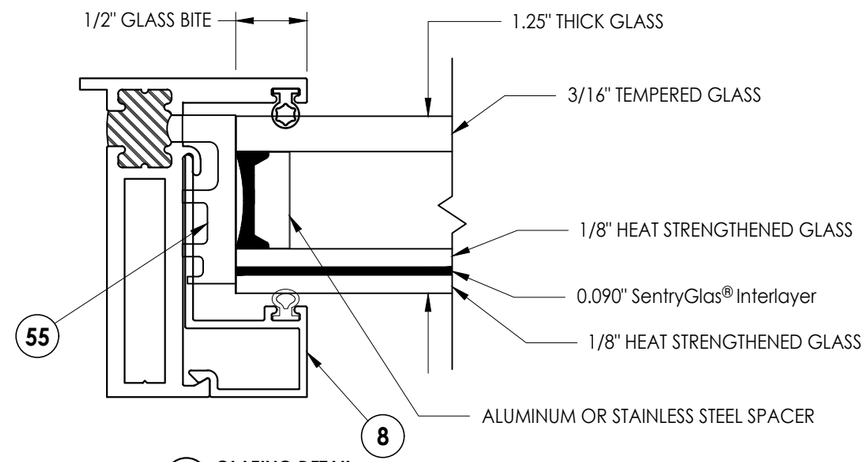

G5 GLAZING DETAIL

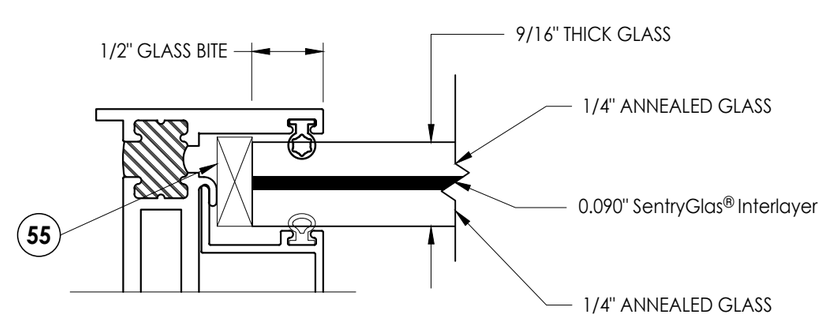

G6 GLAZING DETAIL

Documents Prepared By:
Lyndon F. Schmidt
P.E. No. 43409

RW BUILDING CONSULTANTS, INC.
P.O. Box 230, Valrico, FL 33595
Phone No.: 813.659.9197
FBPE Registry No. 9813

PRODUCT: FLEETWOOD WINDOWS AND DOORS

PART OR ASSEMBLY: GLAZING DETAILS

NO.	DATE	BY
7	7/02/26 UPDATE TO 9TH ED. (2026) FBC	LFS
6	7/12/23 UPDATE TO 8TH ED. (2023) FBC	LFS
5	12/7/21 SERIES NAME CHANGE	LFS
4	8/06/20 UPDATE TO 7TH ED. (2020) FBC	DAC

REVISIONS

DATE: 10/23/13
SCALE: N.T.S.
DWG. BY: JK
CHK. BY: LFS
DRAWING NO.: FL-14904.10
SHEET 7 OF 8

© 2013 R.W. BUILDING CONSULTANTS INC.

Z:\2023 FBC Drawings\Fleetwood Windows & Doors\FL-14904 R10 Casement\FL-14904.8-10.dwg

BILL OF MATERIALS

ITEM #	DESCRIPTION	MATERIAL
A	1X BUCK SG >= 0.55	WOOD
B	2X BUCK SG >= 0.55	WOOD
C	1/4" MAX. SHIM SPACE	-
D	1/4" X 2-3/4" DeWALT OR ITW PFH CONCRETE SCREW	STEEL
E	MASONRY - 3,000 PSI MIN. CONCRETE CONFORMING TO ACI 301 OR HOLLOW BLOCK CONFORMING TO ASTM C90	CONCRETE
F	#10 X 2-1/2" PPH WOOD SCREW (1-1/4" MIN. EMBEDMENT)	STEEL
J	1/4" X 3-1/4" DeWALT OR ITW PFH CONCRETE SCREW	STEEL
K	#10 PPH SELF-DRILLING SMS	STEEL
X	STEEL STUD Min. Thk .033" (ASTM A653 GRADE 33 Fy=33 Ksi Min, Fu=45 Ksi Min)	STEEL
3	THERMAL BREAK ("LIQUID POLYURETHANE" by Azon USA, Inc.)	-
5	BLOCK FRAME (350-T)	6063-T6 ALUM
7	ZEE BAR (PANEL)	6063-T6 ALUM
8	GLASS STOP (1-1/4")	6063-T6 ALUM
10	GLASS STOP (5/16", 7/16")	6063-T6 ALUM
13	CORNER KEY	6063-T6 ALUM
20	SS. BUTT HINGE	SS
21	4 BAR HINGE	SS
22	SNUBBER-COMMERCIAL PULL-IN BLOCK	SS
23	MULTIPOINT LOCK HANDLE	SS
26	3 POINTS LOCKING BAR (TRUTH)	SS
27	4 POINTS LOCKING BAR (TRUTH)	SS
28	TIE BAR GUIDE (TRUTH)	-
29	KEEPER (TRUTH)	SS
30	CASEMENT ROTOR GEAR 13.5"(TRUTH)	SS
31	CASEMENT ROTOR GEAR 9.5"(TRUTH)	SS
35	CAM HANDLE / STRIKE PLATE	SS
36	CASEMENT SS. TRACK (TRUTH)	SS
40	#10 X 1" PPH SMS	STEEL
42	MACHINGE SCREW NO 10-32, FHP .75"	STEEL
43	SCREW NO 10 , UFHP .5"	STEEL
44	SCREW NO 8, PHP, .50"	STEEL
46	SCREW NO 8, FHP, .750"	STEEL
48	BACK UP NUTS	STEEL
50	BULB VINYL (EPDM 70 DUROMETER) - TREMCO	-
51	MINI BULB VINYL (EPDM 70 DUROMETER) - TREMCO	-
55	SETTING BLOCK (SANTOPRENE - 86 DUROMETER) - TREMCO	-
57	PIVOT SHIM	-

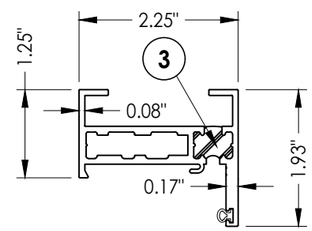

5 BLOCK FRAME

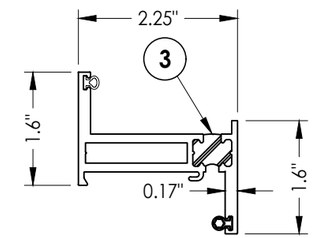

7 ZEE BAR (PANEL)

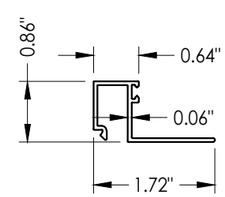

8 GLASS STOP 1-1/4"

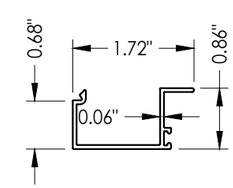

10 GLASS STOP 5/16", 7/16", 9/16'

Documents Prepared By:
Lyndon F. Schmidt
P.E. No. 43409

RW BUILDING CONSULTANTS, INC.
P.O. Box 230, Valrico, FL 33595
Phone No.: 813.659.9197
FBPE Registry No. 9813

PRODUCT: FLEETWOOD WINDOWS AND DOORS

PART OR ASSEMBLY: BILL OF MATERIALS AND COMPONENTS

REVISIONS

NO.	DATE		BY
7	7/02/26	UPDATE TO 9TH ED. (2026) FBC	LFS
6	7/12/23	UPDATE TO 8TH ED. (2023) FBC	LFS
5	12/7/21	SERIES NAME CHANGE	LFS
4	8/06/20	UPDATE TO 7TH ED. (2020) FBC	DAC

DATE: 10/23/13
SCALE: N.T.S.
DWG. BY: JK
CHK. BY: LFS
DRAWING NO.: FL-14904.10
SHEET 8 OF 8

© 2013 R.W. BUILDING CONSULTANTS INC.

Z:\2023 FBC Drawings\Fleetwood Windows & Doors\FL-14904 R10 Casement\FL-14904.8-10.dwg